ISSN 0012-9593

quatrième série - tome 49 *fascicule 5* *septembre-octobre 2016*

ANNALES SCIENTIFIQUES de L'ÉCOLE NORMALE SUPÉRIEURE

Yaar SOLOMON & Barak WEISS

Dense forests and Danzer sets

SOCIÉTÉ MATHÉMATIQUE DE FRANCE

Annales Scientifiques de l'École Normale Supérieure

Publiées avec le concours du Centre National de la Recherche Scientifique

Responsable du comité de rédaction / *Editor-in-chief*

Antoine Chambert-Loir

Publication fondée en 1864 par Louis Pasteur

Continuée de 1872 à 1882 par H. Sainte-Claire Deville
de 1883 à 1888 par H. Debray
de 1889 à 1900 par C. Hermite
de 1901 à 1917 par G. Darboux
de 1918 à 1941 par É. Picard
de 1942 à 1967 par P. Montel

Comité de rédaction au 1er janvier 2016

N. Anantharaman, I. Gallagher
P. Bernard, B. Kleiner
E. Breuillard, E. Kowalski
R. Cerf, M. Mustaţă
A. Chambert-Loir, L. Saloff-Coste

Rédaction / *Editor*

Annales Scientifiques de l'École Normale Supérieure,
45, rue d'Ulm, 75230 Paris Cedex 05, France.
Tél. : (33) 1 44 32 20 88. Fax : (33) 1 44 32 20 80.
annales@ens.fr

Édition / *Publication*

Société Mathématique de France
Institut Henri Poincaré
11, rue Pierre et Marie Curie
75231 Paris Cedex 05
Tél. : (33) 01 44 27 67 99
Fax : (33) 01 40 46 90 96

Abonnements / *Subscriptions*

Maison de la SMF
Case 916 - Luminy
13288 Marseille Cedex 09
Fax : (33) 04 91 41 17 51
email : smf@smf.univ-mrs.fr

Tarifs

Europe : 519 €. Hors Europe : 548 €. Vente au numéro : 77 €.

© 2016 Société Mathématique de France, Paris

En application de la loi du 1er juillet 1992, il est interdit de reproduire, même partiellement, la présente publication sans l'autorisation de l'éditeur ou du Centre français d'exploitation du droit de copie (20, rue des Grands-Augustins, 75006 Paris).
All rights reserved. No part of this publication may be translated, reproduced, stored in a retrieval system or transmitted in any form or by any other means, electronic, mechanical, photocopying, recording or otherwise, without prior permission of the publisher.

ISSN 0012-9593

Directeur de la publication : Stéphane Seuret
Périodicité : 6 nos / an

Ann. Scient. Éc. Norm. Sup.
4e série, t. 49, 2016, p. 1053 à 1074

DENSE FORESTS AND DANZER SETS

BY YAAR SOLOMON AND BARAK WEISS

ABSTRACT. – A set $Y \subseteq \mathbb{R}^d$ that intersects every convex set of volume 1 is called a Danzer set. It is not known whether there are Danzer sets in $\mathbb{R}^d$ with growth rate $O(T^d)$. We prove that natural candidates, such as discrete sets that arise from substitutions and from cut-and-project constructions, are not Danzer sets. For cut and project sets our proof relies on the dynamics of homogeneous flows. We consider a weakening of the Danzer problem, the existence of a uniformly discrete dense forest, and we use homogeneous dynamics (in particular Ratner's theorems on unipotent flows) to construct such sets. We also prove an equivalence between the above problem and a well-known combinatorial problem, and deduce the existence of Danzer sets with growth rate $O(T^d \log T)$, improving the previous bound of $O(T^d \log^{d-1} T)$.

RÉSUMÉ. – Un ensemble de Danzer est une partie Y de $\mathbb{R}^d$ qui rencontre tout ensemble convexe de volume 1. On ne sait pas s'il existe des ensembles de Danzer dans $\mathbb{R}^d$ de croissance $O(T^d)$. Nous démontrons que les candidats naturels, tels que les ensembles discrets produits à l'aide de substitutions, de sections et de projections, ne sont pas des ensembles de Danzer. Dans le cas des sections et projections, notre preuve repose sur la dynamique et la structure des réseaux dans les groupes algébriques. Nous considérons aussi une notion plus faible, l'existence d'une forêt dense uniformément discrète, et nous utilisons la dynamique homogène (en particulier les théorèmes de Ratner sur les flots unipotents) pour construire de tels ensembles. Nous démontrons aussi l'équivalence entre le problème de Danzer et un problème combinatoire classique et en déduisons l'existence d'ensembles de Danzer de croissance $O(T^d \log T)$, améliorant ainsi la borne précédente $O(T^d \log^{d-1} T)$.

1. Introduction

This paper stems from a famous unsolved problem formulated by Danzer in the 1960s (see, e.g., [10, 13, 8, 12]). We will call a subset $Y \subseteq \mathbb{R}^d$ a *Danzer set* if it intersects every convex subset of volume 1. We will say that Y *has growth* $g(T)$, where $g(T)$ is some function, if

$$\#(Y \cap B(0,T)) = O(g(T)) \tag{1.1}$$

0012-9593/05/© 2016 Société Mathématique de France. Tous droits réservés

(as usual $f(x) = O(g(x))$ means $\limsup_{x\to\infty} \frac{f(x)}{g(x)} < \infty$ and $B(0,T)$ is the Euclidean ball of radius T centered at the origin in $\mathbb{R}^d$). Danzer asked whether for $d \geq 2$ there is a Danzer set with growth T^d. In this paper we present several results related to this question.

The only prior results on Danzer's question of which we are aware are due to Bambah and Woods. Their paper [5] contains two results. The first is a construction of a Danzer set in $\mathbb{R}^d$ with growth rate $T^d \log^{d-1}(T)$, and the second is a proof that any finite union of grids [(1)] is not a Danzer set. Our paper contains parallel results.

We prove the following theorems. For detailed definitions of the terms appearing in the statements, we refer the reader to the section in which the result is proved.

THEOREM 1.1. – *Let H be a primitive substitution system on the polygonal basic tiles $\{T_1, \ldots, T_n\}$ in $\mathbb{R}^d$. Any Delone set, which is obtained from a tiling $\tau \in X_H$ by picking a point in the same location in each of the basic tiles, is not a Danzer set. Also the set of vertices of tiles in such a tiling is not a Danzer set.*

In particular the vertex set of a Penrose tiling is not a Danzer set. The vertex set of a Penrose tiling has another description, namely as a cut-and-project set. We now consider such sets.

THEOREM 1.2. – *Let Λ be a finite union of cut-and-project sets. Then Λ is not a Danzer set.*

As for positive results, one may try to construct sets which either satisfy a weakening of the Danzer condition, or a weaker growth condition. The following results are in this vein. A set $Y \subseteq \mathbb{R}^d$ is called a *dense forest* if there is a function $\varepsilon(T) \xrightarrow{T\to\infty} 0$ such that for any $x \in \mathbb{R}^d$ and any direction $v \in \mathbb{S}^{d-1} \stackrel{\text{def}}{=} \{v \in \mathbb{R}^d : \|v\| = 1\}$, the distance from Y to the line segment of length T going from x in direction v is at most $\varepsilon(T)$. It is not hard to show that a Danzer set is a dense forest.

THEOREM 1.3. – *Let $U \cong \mathbb{R}^d$ and suppose X is a compact metric space on which U acts smoothly and completely uniquely ergodically. Then for any cross-section $\mathcal{S}$ and any $x_0 \in X$, the set of 'visit times'*

$$\mathcal{D} \stackrel{\text{def}}{=} \{u \in U : u.x_0 \in \mathcal{S}\}$$

is a uniformly discrete set which is a dense forest. In particular, uniformly discrete dense forests exist in $\mathbb{R}^d$ for any d.

By *completely uniquely ergodically* we mean that the restriction of the action to any one-parameter subgroup of U is uniquely ergodic. Our construction of completely uniquely ergodic actions relies on Ratner's theorem and results on the structure of lattices in algebraic groups.

In order to construct Danzer sets which grow slightly faster than $O(T^d)$, we first establish an equivalence between this question and a related finitary question, namely the 'Danzer-Rogers question' (see Question 5.3). We say that a function $g : A \to B$ is *doubling*, where A, B are either $\mathbb{N}$ or $\mathbb{R}$, if there exists some $C > 0$ such that for all $x \in \mathbb{R}$ we have $g(2x) \leq Cg(x)$.

(1) A *grid* is a translated lattice.

THEOREM 1.4. – *For a fixed $d \geq 2$, and a doubling function $g(x)$ that satisfies $\frac{g(x)}{x^d}$ is non-decreasing, the following are equivalent:*

(i) *There exists a Danzer set $Y \subseteq \mathbb{R}^d$ of growth $O(g(T))$.*
(ii) *For every $\varepsilon > 0$ there exists $N_\varepsilon \subseteq [0,1]^d$, such that $\#N_\varepsilon = O(g(\varepsilon^{-1/d}))$, and such that N_ε intersects every box of volume ε in $[0,1]^d$.*

COROLLARY 1.5. – *If $D \subseteq \mathbb{R}^d$ is a Danzer set of growth rate $g(T)$, where $g(x)$ is as in Theorem 1.4, then there exists a Danzer set contained in $\mathbb{Q}^d$ of growth rate $g(T)$.*

Using Theorem 1.4 and known results for the Danzer-Rogers question, we obtain:

THEOREM 1.6. – *There exists a Danzer set in $\mathbb{R}^d$ of growth rate $T^d \log T$.*

Note that for all $d \geq 3$, this improves the result of [5] mentioned above and represents the slowest known growth rate for a Danzer set.

1.1. Structure of the paper

We have attempted to keep the different sections of this paper self-contained. The material on substitution tilings and the cut-and-project sets, in particular the proofs of Theorems 1.1 and 1.2, are contained in § 2 and § 3 respectively. More results from homogeneous flows are used in order to prove Theorem 1.3 in § 4. In § 5 we introduce some terminology from computational geometry and prove Theorem 1.4 and Corollary 1.5. More background from computational geometry and the proof of Theorem 1.6 are in § 6. In § 7 we list some open questions related to the Danzer problem.

1.2. Acknowledgements

The proof of Theorem 1.2 given here relies on a suggestion of Andreas Strömbergsson. Our initial strategy required a detailed analysis of lattices in algebraic groups satisfying some conditions, and an appeal to Ratner's theorem on orbit-closures for homogeneous flows. We reduced the problem to a question on algebraic groups which we were unable to solve ourselves and after consulting with several experts, we received a complete answer from Dave Morris, and his argument appeared in an appendix of the original version of this paper. Later Strömbergsson gave us a simple argument which made it possible to avoid the results of Morris and to avoid Ratner's theorem. The proof which appears here is Strömbergsson's and we are grateful to him for agreeing to include it, and to Dave Morris for his earlier proof. We are grateful to Manfred Einsiedler, Jens Marklof, Tom Meyerovitch, Andrei Rapinchuk, Saurabh Ray, Uri Shapira and Shakhar Smorodinsky for useful discussions. We are also grateful to the referee for a careful reading of our paper. Finally, we are grateful to Michael Boshernitzan for telling us about Danzer's question. We acknowledge the support of ERC starter grant DLGAPS 279893.

2. Nets that Arise from Substitution Tilings

In this section we prove Theorem 1.1, i.e., that primitive substitution tilings do not give rise to Danzer sets. We begin by quickly recalling the basics of the theory of substitution tilings. For further reading we refer to [14, 21, 23, 25].

2.1. Background on substitutions

A *tiling* of $\mathbb{R}^d$ is a countable collection of tiles $\{S_i\}$ in $\mathbb{R}^d$, each of which is the closure of its interior, such that tiles intersect only in their boundaries, and with $\bigcup_i S_i = \mathbb{R}^d$. We say that the tiling is *polygonal* if the tiles are d-dimensional polytopes, i.e., convex bounded sets that can be obtained as an intersection of finitely many half-spaces. All tilings considered below are polygonal.

Given a finite collection of tiles $\mathcal{T} = \{T_1, \dots, T_n\}$ in $\mathbb{R}^d$, a *substitution* is a map H that assigns to every T_i a tiling of the set T_i by isometric copies of $\zeta T_1, \dots, \zeta T_n$, where $\zeta \in (0,1)$ is fixed and does not depend on i. The definition of H extends in an obvious way to replace a finite union of isometric copies of the T_i's by isometric copies of the ζT_j's. By applying H repeatedly, and rescaling the small tiles back to their original sizes, we tile larger and larger regions of the space. *Substitution tilings* are tilings of $\mathbb{R}^d$ that are obtained as limits of those finite tilings. More precisely, set $\xi = \zeta^{-1} > 1$ and define

$$\mathcal{P} = \{(\xi H)^m(T_i) : m \in \mathbb{N}, i \in \{1, \dots, n\}\}.$$

The *substitution tiling space* X_H is the set of tilings τ of $\mathbb{R}^d$ having the property that for every compact set $K \subseteq \mathbb{R}^d$, there exists some $P \in \mathcal{P}$, such that the patch defined by $\{\text{tiles } T \text{ of } \tau : T \subseteq K\}$ is a sub-patch of P. The tilings $\tau \in X_H$ are *substitution tilings* that correspond to H, and the constant ξ is referred to as the *inflation constant* of H. For every i the isometric copies of T_i are called *tiles of type i*.

A substitution H on $\mathcal{T} = \{T_1, \dots, T_n\}$ defines the *substitution matrix*, which is a non-negative integer matrix $A_H = (a_{ij})$, where a_{ij} is the number of appearances of isometric copies of ζT_i in $H(T_j)$. H is called *primitive* if A_H is a primitive matrix. Namely, A_H^m has strictly positive entries, for some $m \in \mathbb{N}$. Observe that primitivity is a natural assumption in this context, since otherwise we could get a smaller substitution system by restricting H to a subset of $\{T_1, \dots, T_n\}$ (and possibly replacing H by some fixed power of H). For example, the matrix $A_H = \left(\begin{smallmatrix} 2 & 1 \\ 1 & 1 \end{smallmatrix}\right)$ corresponds to the substitution of the Penrose triangles that are presented below in Figure 1.

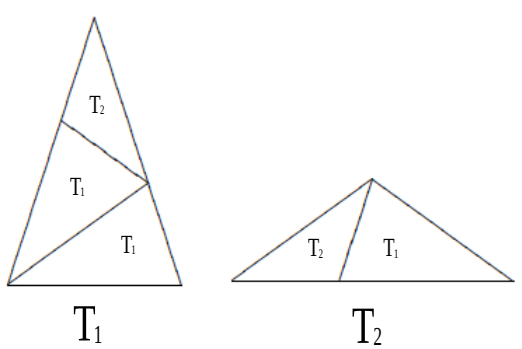

FIGURE 1. Penrose substitution rule.

Primitive substitution tiling satisfy a useful 'inflation' property (see [23]). For $m \in \mathbb{N}$ it is convenient to consider the set of inflated tiles $\mathcal{T}^{(m)} = \{\xi^m T_1, \dots, \xi^m T_n\}$ with the dissection rule $H^{(m)}$ that is induced by H, and the substitution tiling space $X_{H^{(m)}}$.

PROPOSITION 2.1. – *If H is a primitive substitution then $X_H \neq \varnothing$ and for every $\tau \in X_H$ and $m \in \mathbb{N}$ there exists a tiling $\tau_m \in X_{H^{(m)}}$ that satisfies $H^m(\tau_m) = \tau$.*

We use the following terminology throughout the proof of Theorem 1.1. Let H be a primitive substitution defined on a finite set of polygonal tiles $\mathcal{T} = \{T_1, \dots, T_n\}$ in $\mathbb{R}^d$, with an inflation constant $\xi > 1$. A *choice function* is a function which assigns to each tile T_i a point $h(T_i) \in T_i$. For a tiling $\tau_0 \in X_H$, and a choice function h, denote by $Y_{\tau_0,h}$ the Delone set [(2)] that is obtained by placing one point in each tile of τ_0, with respect to the choices of h. More precisely, each tile of τ_0 is equal to $g(T_i)$, for some i and some isometry g of $\mathbb{R}^d$. The function h can naturally be extended to all the tiles of τ_0, then to collections of tiles of τ_0, and in turn to tilings $\tau \in X_H$. We define $Y_{\tau_0,h} = h(\tau_0)$. Theorem 1.1 says that $Y_{\tau_0,h}$ is not a Danzer set, for any primitive substitution polygonal tiling in X_H and any choice function h.

In this section we will use the letter D to denote the Euclidean distance. For a closed set A and a point $x \in \mathbb{R}^d$, we will write $D(x, A) = \inf_{a \in A} D(x, a)$, and for a set A and $\delta > 0$ we denote by $U_\delta(A)$ the δ-neighborhood of A. Also let V_d denote the volume of the d-dimensional unit ball.

Proof of Theorem 1.1. – Let h be a choice function and let $Y = Y_{\tau_0.h}$. We first consider the case where $h(T_i) \in int(T_i)$ for every i. Denote by

$$\delta = \min_i \{D(h(T_i), \partial T_i)\}, \tag{2.1}$$

and note that we are assuming for the moment that $\delta > 0$. Denote by $\partial\tau$ the union of all the boundaries of tiles of a tiling τ. Then our definition of δ ensures that any element $x \in Y$ satisfies $D(x, \partial\tau_0) \geq \delta$.

If a $d-1$-dimensional face of a tile in τ_0 contains a segment of length t, then the same face of the same type of tile in τ_m contains a segment of length $t \cdot \xi^m$. The tiles are polygonal, so let m be large enough such that some face F of some tile in τ_m contains a segment L of length ℓ where $\ell\delta^{d-1}V_{d-1} > 1$. Since $\partial\tau_m \subseteq \partial\tau_0$, L is also contained in $\partial\tau_0$. By (2.1), $U_\delta(L)$ misses Y. Clearly $U_\delta(L)$ is convex, and the choice of m and ℓ guarantees that the volume of $U_\delta(L)$ is at least 1.

Now suppose $\delta = 0$, i.e., for some i, $h(T_i) \in \partial T_i$. Choose δ_1 small enough so that the following hold: if $h(T_i) \notin \partial T_i$ then $2\delta_1 < D(h(T_i), \partial T_i)$; if $h(T_i) \in \partial T_i$ then $h(T_i)$ is contained in some of the boundary faces of T_i, and we require that $2\delta_1$ is smaller than the distance from $h(T_i)$ to the boundary faces of T_i which do not contain $h(T_i)$. With this choice of δ_1, let $L \subseteq \partial\tau_m$ be a line as in the preceding case, where m is chosen large enough so that the length ℓ of L satisfies $\ell\delta_1^{d-1}V_{d-1} > 1$. Let v be a vector of length δ_1 which is perpendicular to the boundary face containing L and let $L' = L + v$. Then $U' = U_{\delta_1}(L')$ is contained in $U_{2\delta_1}(L)$ and thus contains none of the points of Y which are not in $\partial\tau_0$. Moreover L' is of distance δ_1 from the boundary faces containing L, so U' is disjoint from these boundary

(2) A *Delone set* or *separated net* is defined as a set $Y \subseteq \mathbb{R}^d$ satisfying conditions $\inf_{x,y \in Y, x \neq y} \|x - y\| > 0$, $\sup_{x \in \mathbb{R}^d} \inf_{y \in Y} \|x - y\| < \infty$.

faces, but every point of U' is within distance $2\delta_1$ from these boundary faces. Our definition of δ_1 ensures that U' does not contain points belonging to $Y \cap \partial\tau_0$. Thus U' misses Y, and is a convex set of volume at least 1, as required.

Finally consider the set of vertices Y of the tiling τ_0. Let δ_1 be small enough so that for any boundary face of any T_i, the distance from the face to any of the vertices not on the face is greater than $2\delta_1$. Using the same m and the same line $L \subseteq \partial\tau_0$ as in the preceding paragraph, define $L', U' = U_{\delta_1}(L')$ as above. Then the fact that $L \subseteq \partial\tau_0$ and the definition of δ_1 ensures that $U' \cap Y = \varnothing$, so Y is not a Danzer set. □

3. Cut-and-project sets

Let d, k, n be integers with $d > 1, k \geq 1$ and $n = d + k$, and write $\mathbb{R}^n$ as the direct sum of $\mathbb{R}^d$ and $\mathbb{R}^k$. We refer to the numbers d, k, n as the *physical dimension, internal dimension*, and *full dimension*, the spaces $\mathbb{R}^d$ and $\mathbb{R}^k$ are the *physical and internal spaces*, and denote by $\pi_{\text{phys}} : \mathbb{R}^n \to \mathbb{R}^d$ and $\pi_{\text{int}} : \mathbb{R}^n \to \mathbb{R}^k$ the projections associated with this direct sum decomposition; i.e., for $\vec{x} = (x_1, \ldots, x_n)$,

$$\pi_{\text{phys}}(\vec{x}) = (x_1, \ldots, x_d), \;\; \pi_{\text{int}}(\vec{x}) = (x_{d+1}, \ldots, x_n).$$

Let $L \subseteq \mathbb{R}^n$ be a grid (recall that a grid is a translate of a lattice) and let $W \subseteq \mathbb{R}^k$ be a bounded subset. The set

$$\Lambda(L, W) \stackrel{\text{def}}{=} \pi_{\text{phys}}\left(L \cap \pi_{\text{int}}^{-1}(W)\right)$$

is called a *cut-and-project set* or *model set*. Such sets have been extensively studied (see [19, 3, 24] and the references therein). In particular the vertex set of a Penrose tiling provides an example of a cut-and-project set. In this section, following [17], we will apply homogeneous dynamics in order to analyze the geometry of cut-and-project sets, and to prove Theorem 1.2.

We begin with a dynamical characterization of Danzer sets. It will be more convenient to work with the class of dilates of Danzer sets. We say that $Y \subseteq \mathbb{R}^d$ is a *Dilate of a Danzer set* (or *DDanzer* for short), if there is $c > 0$ such that the dilate $cY = \{cy : y \in Y\}$ is Danzer. Let $\mathrm{ASL}_d(\mathbb{R}) \cong \mathrm{SL}_d(\mathbb{R}) \ltimes \mathbb{R}^d$ denote the group of affine orientation-preserving, measure-preserving transformations of $\mathbb{R}^d$. Since $\mathrm{ASL}_d(\mathbb{R})$ maps convex sets to convex sets and preserves their volumes, the property of being DDanzer set is invariant under the action of $\mathrm{ASL}_d(\mathbb{R})$ on subsets of $\mathbb{R}^d$. Moreover it can be characterized in terms of this action.

PROPOSITION 3.1. – *Let $Y \subseteq \mathbb{R}^d$. Then Y is DDanzer if and only if there is $T > 0$ such that for every $g \in \mathrm{ASL}_d(\mathbb{R})$, $gY \cap B(0, T) \neq \varnothing$.*

Proof. – This is a straightforward corollary of John's theorem (see [4, Lecture 3]) that asserts that any convex subset K of $\mathbb{R}^d$ contains an ellipsoid E with $E \subseteq K \subseteq dE$ (where dE denotes the dilation of E by a factor of d). Since all ellipsoids of volume $\mathrm{vol}(B(0, T))$ map to the ball $B(0, T)$ under an affine transformation, the result follows. □

We begin with a few reductions of the problem. It will simplify notation to take $\mathbb{R}^2$ and in fact this entails no loss of generality:

PROPOSITION 3.2. – *Suppose $d \geq 3$. If $\Lambda \subseteq \mathbb{R}^d$ is a finite union of cut-and-project sets (respectively, a DDanzer set), $\mathbb{R}^d = \mathbb{R}^2 \oplus \mathbb{R}^{d-2}$ is a direct sum decomposition with associated projections $\pi_1 : \mathbb{R}^d \to \mathbb{R}^2, \pi_2 : \mathbb{R}^d \to \mathbb{R}^{d-2}$, and $W \subseteq \mathbb{R}^{d-2}$ is bounded with non-empty interior, then $\Lambda' \stackrel{\text{def}}{=} \{\pi_1(x) : x \in \Lambda \cap \pi_2^{-1}(W)\}$ is also a finite union of cut-and-project sets (respectively, a DDanzer set).*

Proof. – Left to the reader. □

From this point on we consider $\mathbb{R}^n$ with its standard $\mathbb{Q}$-structure $\mathbb{Q}^n$. We will make a convenient reduction. We say that a lattice $L \subseteq \mathbb{R}^n$ is $\mathbb{Q}$-*irreducible with respect to the physical space* if there is no proper rational subspace $R \subseteq \mathbb{R}^n$ such that $R \cap L$ is a lattice in R and R contains $\ker \pi_{\text{int}}$ (the second condition may be stated equivalently by saying that R contains the physical space $\mathbb{R}^d$). We say that a grid L is $\mathbb{Q}$-irreducible with respect to the physical space if the underlying lattice $L - L$ is, and we will say that a cut-and-project set Λ is *irreducible* if it can be presented as $\Lambda(L, W)$ for some grid L and some window W, so that L is $\mathbb{Q}$-irreducible with respect to the physical space.

PROPOSITION 3.3. – *Suppose Λ is a finite union of cut-and-project sets. Then there is a finite union of cut-and-project sets $\Lambda' = \Lambda'_1 \cup \cdots \cup \Lambda'_s$ containing Λ, such that each Λ'_j is irreducible.*

Proof. – By induction on the number of cut-and-project sets defining Λ, we can assume that this number is one, i.e., Λ is a cut-and-project set. If Λ is irreducible there is nothing to prove. If not, we will show below that Λ is contained in a finite union of cut-and-project sets of smaller internal dimensions. This will imply the result via another induction on the internal dimension (note that when the internal dimension is 0, Λ is irreducible).

Our notation is as follows: L is the grid, $L_0 = L - L$ is the underlying lattice, $\pi_{\text{phys}}, \pi_{\text{int}}$ are the projections, $V_{\text{phys}} = \ker \pi_{\text{int}}$ is the physical space, $V_{\text{int}} = \ker \pi_{\text{phys}}$ is the internal space, and $W \subseteq V_{\text{int}}$ is the window, in the construction of Λ. Let R be a proper rational subspace of $\mathbb{R}^n$ such that $L' \stackrel{\text{def}}{=} L_0 \cap R$ is a lattice in R, and R contains V_{phys}. Let $R' = R \cap V_{\text{int}}$. We will find some positive integer s and for $j = 1, \ldots, s$ find bounded sets $W'_j \subseteq R'$, and vectors $y_j \in R$, satisfying the following: for any $\ell \in L$ such that $\pi_{\text{int}}(\ell) \in W$ there is $j \in \{1, \ldots, s\}$ and $\widetilde{\ell} \in L'_j \stackrel{\text{def}}{=} L' + y_j$ such that $\pi_{\text{phys}}(\widetilde{\ell}) = \pi_{\text{phys}}(\ell)$ and $\pi_{\text{int}}(\widetilde{\ell}) \in W'_j$. This will complete the proof, since it implies that $\Lambda = \pi_{\text{phys}}(L \cap \pi_{\text{int}}^{-1}(W))$ is contained in $\bigcup \Lambda'_j$, where $\Lambda'_j \stackrel{\text{def}}{=} \pi_{\text{phys}}(L'_j \cap \pi_{\text{int}}^{-1}(W'_j))$.

Let $V_0 \subseteq V_{\text{int}}$ be a subspace such that $R \oplus V_0 = \mathbb{R}^n$, and let π, π_0 be the projections associated with this direct sum decomposition. Since $V_0 \subseteq V_{\text{int}}$ we have $\pi_0 = \pi_{\text{int}} \circ \pi_0$ and the assumption that $V_{\text{phys}} \subseteq R$ implies $\pi_0 = \pi_0 \circ \pi_{\text{int}}$. Since L' is a lattice in R, $\pi_0(L)$ is discrete in V_0. Since W is bounded, so is $\pi_0(W)$, and hence $\pi_0(L) \cap \pi_0(W)$ is finite. Let $\ell_1, \ldots, \ell_s \in L$ such that

$$\pi_0(L) \cap \pi_0(W) = \{\pi_0(\ell_j) : j = 1, \ldots, s\}.$$

For $j = 1, \ldots, s$ write $\ell_j = x_j + y_j$ where $x_j = \pi_0(\ell_j)$ and $y_j = \pi(\ell_j)$, and let $W'_j = R \cap (W - x_j)$. Clearly $W'_j \subseteq R$, and since W is bounded, so is W'_j.

Suppose $\ell \in L$ with $\pi_{\mathrm{int}}(\ell) \in W$. We can write $\ell = \pi_0(\ell) + \widetilde{\ell}$ with $\widetilde{\ell} \in R$. Then $\pi_{\mathrm{phys}}(\widetilde{\ell}) = \pi_{\mathrm{phys}}(\ell)$ since $\ell - \widetilde{\ell} \in V_0 \subseteq V_{\mathrm{int}}$. Since $\pi_0 = \pi_0 \circ \pi_{\mathrm{int}}$, we have $\pi_0(\ell) \in \pi_0(W)$, and there is j so that $\pi_0(\ell) = \pi_0(\ell_j) = x_j$, and

$$\widetilde{\ell} - y_j = \ell - \pi_0(\ell) - (\ell_j - x_j) = \ell - \ell_j \in L_0 \cap R.$$

This shows $\widetilde{\ell} \in L'_j$. Finally to see that $\pi_{\mathrm{int}}(\widetilde{\ell}) \in W'_j$, note that

$$\pi_{\mathrm{int}}(\widetilde{\ell}) = \pi_{\mathrm{int}}(\ell) - \pi_{\mathrm{int}} \circ \pi_0(\ell) = \pi_{\mathrm{int}}(\ell) - \pi_0(\ell) = \pi_{\mathrm{int}}(\ell) - x_j \in W - x_j,$$

and $\pi_{\mathrm{int}}(\widetilde{\ell}) \in R$ since $\pi_0 \circ \pi_{\mathrm{int}}(\widetilde{\ell}) = \pi_0(\widetilde{\ell}) = 0$. □

Let $\mathcal{X}_n$ denote the space of unimodular lattices in $\mathbb{R}^n$. Recall that this space is identified with the quotient $\mathrm{SL}_n(\mathbb{R})/\mathrm{SL}_n(\mathbb{Z})$ via the map which sends the coset $g\,\mathrm{SL}_n(\mathbb{Z})$ to the lattice $g\mathbb{Z}^n$, and that this identification intertwines the action of $\mathrm{SL}_n(\mathbb{R})$ on $\mathcal{X}_n$ by linear transformations of $\mathbb{R}^n$, with the homogeneous left-action $g_1\tau(g_2) = \tau(g_1 g_2)$, where $\tau : \mathrm{SL}_n(\mathbb{R}) \to \mathcal{X}_n$ is the natural projection. A crucial ingredient in our argument will be the following fact:

Proposition 3.4 (Andreas Strömbergsson). – *Let $H_0 \cong \mathrm{SL}_2(\mathbb{R})$ be embedded in $\mathrm{SL}_n(\mathbb{R})$ in the upper left-hand corner; i.e., with respect to the decomposition $\mathbb{R}^n = \mathbb{R}^2 \oplus \mathbb{R}^{n-2}$, H_0 acts via its standard action on the first summand and trivially on the second summand. Then for any $x \in \mathcal{X}_n$, the orbit $H_0 x$ is unbounded (i.e., its closure is not compact).*

Proof. – Suppose by contradiction that $H_0 x$ is bounded, and let $g_0 \in \mathrm{SL}_n(\mathbb{R})$ such that $x = \tau(g_0)$. By Mahler's compactness criterion (see e.g., [13, Chap. 3]), there is $\varepsilon > 0$ such that

$$\text{for any } v \in g_0\mathbb{Z}^n \smallsetminus \{0\} \text{ and any } h \in H_0,\ \|hv\| \geq \varepsilon, \tag{3.1}$$

where $\|\cdot\|$ denotes the sup norm on $\mathbb{R}^n$. Let P, Q denote respectively the projections $\mathbb{R}^n \to \mathbb{R}^2$, $\mathbb{R}^n \to \mathbb{R}^{n-2}$ corresponding to the direct sum decomposition $\mathbb{R}^n \cong \mathbb{R}^2 \oplus \mathbb{R}^{n-2}$. Then H_0 acts transitively on all nonzero vectors in the image of P, and acts trivially on the image of Q; that is for any $v \in \mathbb{R}^n$ and any $h \in H_0$, $P(hv) = hP(v), Q(hv) = Q(v)$. Also since we have chosen the sup norm we can write $\|v\| = \max(\|P(v)\|, \|Q(v)\|)$ for any $v \in \mathbb{R}^n$. Since $g_0\mathbb{Z}^n$ is an abelian group of rank n, either $g_0\mathbb{Z}^n \cap \ker Q \neq \{0\}$, or $Q(g_0\mathbb{Z}^n)$ is not discrete in $\mathbb{R}^{n-2}$. In either case there is $v_0 \in g_0\mathbb{Z}^n \smallsetminus \{0\}$ such that $\|Q(v_0)\| < \varepsilon$. Since H_0 acts transitively on $\mathbb{R}^2 \smallsetminus \{0\}$, there is $h \in H_0$ such that $\|hP(v_0)\| < \varepsilon$. This implies that

$$\|hv_0\| = \max(\|P(hv_0)\|, \|Q(hv_0)\|) = \max(\|hP(v_0)\|, \|Q(v_0)\|) < \varepsilon,$$

a contradiction to (3.1). □

The following statement was proved in response to our question by Dave Morris. The proof of Morris relied on structure theory for algebraic groups and appears in the appendix to a preliminary version of our paper. Here we give a simpler proof using Proposition 3.4.

Corollary 3.5 (Dave Morris). – *Let $H_0 \cong \mathrm{SL}_2(\mathbb{R})$ be as above. Then for any semisimple group $G \subseteq \mathrm{SL}_n(\mathbb{R})$ containing H_0, there is no conjugate G' of G in $\mathrm{SL}_n(\mathbb{R})$ whose intersection with $\mathrm{SL}_n(\mathbb{Z})$ is a cocompact lattice in G'.*

Proof. – If such a conjugate $G' = g_0^{-1}Gg_0$ existed, then $G'\mathbb{Z}^n$ would be compact, and hence so would the orbit-closure $\overline{H_0\tau(g_0)} \subset G\tau(g_0) \cong g_0G'\mathbb{Z}^n$, contradicting Proposition 3.4. □

Let $\mathcal{Y}_n \stackrel{\text{def}}{=} \mathrm{ASL}_n(\mathbb{R})/\mathrm{ASL}_n(\mathbb{Z})$ be the space of n-dimensional unimodular grids, and let $H \stackrel{\text{def}}{=} \mathrm{ASL}_2(\mathbb{R})$ be embedded in $\mathrm{ASL}_n(\mathbb{R})$ in the upper left-hand corner. Equivalently, the action of H on $\mathbb{R}^n$ preserves the physical space and acts on it as the group of affine volume preserving transformations. Proposition 3.4 restricts the orbit-closures of H acting on

COROLLARY 3.6. – *Let H be embedded as above. Then for any $y \in \mathcal{Y}_n$, the orbit-closure $\overline{Hy}$ is noncompact.*

Proof. – Let $P : \mathrm{ASL}_n(\mathbb{R}) \to \mathrm{SL}_n(\mathbb{R})$ be the natural projection sending an affine map to its linear part. Then P is defined over $\mathbb{Q}$, and induces an equivariant map $\bar{P} : \mathcal{Y}_n \to \mathcal{X}_n$, which has a compact fiber. In particular $\bar{P}$ is a proper map. We denote $H_0 \stackrel{\text{def}}{=} P(H) \cong \mathrm{SL}_2(\mathbb{R})$, $x = \bar{P}(y)$. By Proposition 3.4, $\bar{P}\left(\overline{Hy}\right) = \overline{H_0x}$ is not compact, and hence $\overline{Hy}$ is not compact. □

COROLLARY 3.7. – *Keeping the notations and assumptions of Corollary 3.6, assume that the linear part of the grid y is $\mathbb{Q}$-irreducible with respect to the physical space. Then the orbit-closure $\overline{Hy}$ is invariant under all translations in $\mathbb{R}^n$.*

Proof. – We keep the notations of the previous proof. Let $T \cong \mathbb{R}^n$ be the unipotent radical of $\mathrm{ASL}_n(\mathbb{R})$, i.e., the normal subgroup of affine maps which are actually translations. We need to show that $\Omega \stackrel{\text{def}}{=} \overline{Hy}$ is T-invariant for any $y \in \mathcal{Y}_n$. Let $S \subseteq T$, $S \cong \mathbb{R}^2$ be the group of translations in the direction of the physical space which act trivially on the internal space. The assumption that y is $\mathbb{Q}$-irreducible with respect to the physical space implies that there is no intermediate linear subspace $S \subseteq S' \subsetneq T$ such that $S'y$ is closed, and this implies that $\overline{Sy} = Ty$. Since T is normal in $\mathrm{ASL}_n(\mathbb{R})$, for any $h \in H$, $\Omega \supseteq \overline{hSy} = hTy = Thy$, i.e., there is a dense set of $z \in \Omega$ for which $Tz \subseteq \Omega$. This implies that Ω is T-invariant. □

We will need similar statements for products of spaces $\mathcal{Y}_{n_i}$. If z_ℓ is a sequence in a topological space, we will write $z_\ell \xrightarrow{\ell\to\infty} \infty$ if the sequence has no convergent subsequence.

PROPOSITION 3.8. – *Suppose $\mathcal{Z}_1, \dots, \mathcal{Z}_r$ are locally compact spaces, H is a topological group acting continuously on each $\mathcal{Z}_i$, such that for every i and every $z \in \mathcal{Z}_i$ there is a sequence $(h_j) \subseteq H$ for which $h_jz \xrightarrow{j\to\infty} \infty$. Then for every $(z_1, \dots, z_r) \in \mathcal{Z}_1 \times \cdots \times \mathcal{Z}_r$ there is a sequence $(h_j) \subseteq H$ such that for each i, $h_jz_i \xrightarrow{j\to\infty} \infty$.*

Proof. – By induction on r. If $r = 1$ this is immediate from assumption, and we suppose $r \geq 2$ and $(z_1, \dots, z_r) \in \mathcal{Z}_1 \times \cdots \times \mathcal{Z}_r$. By the induction hypothesis there is a sequence $(g_j) \subseteq H$ such that $g_jz_i \xrightarrow{j\to\infty} \infty$ in $\mathcal{Z}_i$ for $i = 1, \dots, r-1$. If $g_jz_r \xrightarrow{j\to\infty} \infty$ in $\mathcal{Z}_r$ then there is nothing to prove. Otherwise we may replace g_j by a subsequence to assume that $g_jz_r \to z$. By assumption there is a sequence $(h'_j) \subseteq H$ such that $h'_jz \xrightarrow{j\to\infty} \infty$ in $\mathcal{Z}_r$. Our required subsequence will be obtained by replacing (g_j) with a subsequence and selecting $h_j = h'_jg_j$.

To this end, by induction on $i_0 = 1, \dots, r$, we will choose a subsequence of (g_j) (which we continue to denote by (g_j)) with the following property:

$$h'_j \widetilde{g}_j z_i \xrightarrow{j\to\infty} \infty, \text{ for every subsequence } (\widetilde{g}_j) \subseteq (g_j) \text{ and } i < i_0. \tag{3.2}$$

The base of the induction corresponds to the case $i_0 = 1$ in which case (3.2) is vacuously satisfied. Let $\{K_\ell : \ell \in \mathbb{N}\}$ be an exhaustion of $\mathcal{Z}_{i_0}$ by compact sets. Suppose first that $i_0 < r$. Then for any j there is ℓ so that if $z \notin K_\ell$ then $h'_j z \notin K_j$. This implies that there is $j_0 = j_0(j)$ such that for all $j' \geq j_0$, $h'_j g_{j'} \notin K_j$. Therefore if we replace (g_j) by the subsequence $(g_{j_0(j)})$ then (3.2) will hold. Finally if $i_0 = r$ then since $g_j z_r \to z$ and $h'_j z \xrightarrow{j\to\infty} \infty$, for each j we can find $j_0 = j_0(j)$ such that for $j' \geq j_0$, $h'_j g_{j'} z_r \notin K_j$ and so, if we replace (g_j) by $(g_{j_0(j)})$ then (3.2) will hold. □

We will need a similar but stronger statement for the case of translations on vector spaces.

PROPOSITION 3.9. – *Suppose $V_1, \dots, V_r$ are vector spaces, $P_i : V_1 \times \cdots \times V_r \to V_i$ is the natural projection, $Q_i \subseteq V_i$ is a hyperplane for each i, and $\bar{P}_i$ is the composition of P_i with the quotient map $V_i \to V_i/Q_i$. If $U \subseteq V_1 \times \cdots \times V_r$ is a linear subspace such that $P_i(U) = V_i$ for each i, then there is a sequence $(u_j) \subseteq U$ such that for each i, $\bar{P}_i(u_j) \xrightarrow{j\to\infty} \infty$ in V_i/Q_i.*

Proof. – In view of the surjectivity of $P_i|_U$, the preimage $U_i \stackrel{\text{def}}{=} U \cap P_i^{-1}(Q_i)$ is a hyperplane of U. Let d be a translation-invariant metric on U. We may take any sequence $(u_j) \subseteq U$ such that $d(u_j, \bigcup_i U_i) \xrightarrow{j\to\infty} \infty$. □

COROLLARY 3.10. – *Let $n_1, \dots, n_r$ be integers greater than 2, and suppose that for each i we are given an embedding of $H \cong \mathrm{ASL}_2(\mathbb{R})$ as in Corollary 3.6. Then for any $y = (y_1, \dots, y_r) \in \prod_1^r \mathcal{Y}_{n_i}$, there is a sequence $(h_\ell) \subseteq H$ such that $h_\ell y_i \to_{\ell\to\infty} \infty$ simultaneously for all i.*

Furthermore, suppose the linear parts of the y_i are $\mathbb{Q}$-irreducible with respect to the physical subspace. Denote by $\Delta(H)$ the diagonal embedding of H in $\prod \mathrm{ASL}_{n_i}(\mathbb{R})$. Then $\overline{\Delta(H)y}$ is invariant under a subgroup S in the full group of translations $\prod \mathbb{R}^{n_i}$, which projects onto each of the factors $\mathbb{R}^{n_i}$.

Proof. – The first assertion is immediate from Corollary 3.6 and Proposition 3.8. For the second assertion, let $T^{(i)}$ be the unipotent radical (i.e., translational part) of $\mathrm{ASL}_{n_i}(\mathbb{R})$ and let $T = T^{(1)} \times \cdots \times T^{(r)}$ be the unipotent radical of $\prod \mathrm{ASL}_{n_i}$, let $S \subset \Delta(H)$ be the diagonal embedding of the unipotent radical (translational part) of H, and let $\Omega = \overline{\Delta(H)y}$. We know that Ω is invariant under S and our goal is to show that it is invariant under a group S' which projects onto each $T^{(i)}$. As in the proof of Corollary 3.7, it suffices to show that $\Omega_0 = \overline{Sy}$ is equal to $S'y$, where $S' \subset T$ is a linear subspace which projects onto each $T^{(i)}$, and S' is normalized by H. Since Ty is a torus of dimension $\sum n_i$, there is a linear subspace S' such that $\overline{Sy} = S'y$, S' is defined over $\mathbb{Q}$ and its projection to each $T^{(i)}$ is defined over $\mathbb{Q}$ and contains the physical subspace. As in the proof of Corollary 3.7, this implies that the projection is onto $T^{(i)}$. Moreover S' is the smallest $\mathbb{Q}$-subgroup of T containing S. Thus for any $h \in H$, $hS'h^{-1}$ is the smallest $\mathbb{Q}$-subgroup of hTh^{-1} containing hSh^{-1}. Since T and S are both invariant under conjugation by elements of H, so is S'. □

Proof of Theorem 1.2. – To make the idea more transparent we will first prove that one cut and project set is not a DDanzer set, under the assumptions that it is in $\mathbb{R}^2$ and is irreducible. We will then proceed to the general case.

So let Λ be a cut-and-project set with $\Lambda \subseteq \mathbb{R}^2$ and $\Lambda = \Lambda(L, W)$, where $L \subseteq \mathbb{R}^n$ is a lattice, $\mathbb{R}^n = \mathbb{R}^2 \oplus \mathbb{R}^{n-2}$ is the decomposition of $\mathbb{R}^n$ into the physical and internal spaces, and L is $\mathbb{Q}$-irreducible with respect to the physical space. We want to show that Λ is not DDanzer.

Let $H = \mathrm{ASL}_2(\mathbb{R})$. Applying Proposition 3.1 we need to show that for any $T > 0$ there is $h \in H$ such that

$$h\Lambda \cap B(0,T) = \varnothing. \tag{3.3}$$

Inspired by [17], we will use the observation that the projection π_{phys} is equivariant with respect to the H-action on $\mathcal{Y}_n$. More precisely, let $L = g_0\mathbb{Z}^n$. By rescaling there is no loss of generality in assuming that $\det(g_0) = 1$, so we can regard L as an element of $\mathcal{Y}_n$. Consider the embedding of H in $\mathrm{ASL}_n(\mathbb{R})$ as in Corollary 3.6. Then H acts simultaneously on subsets of $\mathbb{R}^2$ via its affine action, and on $\mathcal{Y}_n$ by left translations, and since the H-action is trivial on $\mathbb{R}^{n-2}$, we have

$$h\Lambda(L, W) = \Lambda(hL, W) \ \ \forall h \in H,\ L \in \mathcal{Y}_n.$$

According to Corollaries 3.6 and 3.7, the orbit-closure $\overline{HL}$ is non-compact and invariant under translations in $\mathbb{R}^n$. According to Minkowski's theory of successive minima (see e.g., [7, Chap. 1]), this implies that in $\overline{HL}$ we can find grids whose corresponding lattices have arbitrarily large n-th successive minimum. That is, for any T' we can find $h \in H$ such that the points of hL are contained in parallel affine hyperplanes with distance at least T' apart.

Given $T > 0$, let C be an open bounded subset of $\mathbb{R}^n$ which contains the closure of $\pi_{\mathrm{phys}}^{-1}(B(0,T)) \cap \pi_{\mathrm{int}}^{-1}(W)$, and let T' be the diameter of C. Since $\overline{HL}$ is not bounded, there is $h' \in H$ so that $h'L$ misses a translate of C, and since $\overline{HL}$ is invariant under translations, there is $h \in H$ so that hL misses C. This implies (3.3).

We now prove the general case of the theorem, i.e., when $\Lambda = \Lambda_1 \cup \cdots \cup \Lambda_r$, $\Lambda_i = \Lambda(L_i, W_i)$. By Propositions 3.2 and 3.3 there is no loss of generality in assuming that $d = 2$ and each Λ_i is irreducible. For each $T > 0$ we will find $h \in H$ such that

$$h\Lambda_i \cap B(0,T) = \varnothing,\ i = 1, \dots, r. \tag{3.4}$$

We denote the dimension of the total space (sum of physical space and internal space) of Λ_i by n_i, denote the corresponding projections by $\pi_{\mathrm{phys}}^{(i)}, \pi_{\mathrm{int}}^{(i)}$, write $n = n_1 + \cdots + n_r$, and consider the orbit of

$$L \stackrel{\mathrm{def}}{=} L_1 \oplus \cdots \oplus L_r$$

under the diagonal action of $\Delta(H)$ on the space of products of grids $\mathcal{Y}^{(1)} \times \cdots \times \mathcal{Y}^{(r)}$ (where we are simplifying the notation by writing $\mathcal{Y}^{(i)}$ for $\mathcal{Y}_{n_i}$ and $\mathcal{X}^{(i)}$ for $\mathcal{X}_{n_i}$). Denote by $\bar{L}, \bar{L}_i$ the corresponding lattices in $\mathcal{X}_n, \mathcal{X}^{(i)}$. By Corollary 3.10, there is $(h'_j) \subseteq H$ such that $h'_j\bar{L}_i \xrightarrow{j\to\infty} \infty$ for all i. This implies that there are hyperplanes $Q(i,j)$ in $\mathbb{R}^{n_i}$ such that the points in $h'_j\bar{L}_i$ are contained in a union of translates of $Q(i,j)$ and the distance between the translates tends to infinity with j. Since the space of hyperplanes is compact we may pass to subsequences to assume that $Q(i,j) \to Q_i$ for each i. Applying Proposition 3.9 we may replace h'_j with h_j so that h_jL_i and h'_jL_i differ by a translation whose component in

the direction perpendicular to Q_i goes to infinity with j. In particular, the grids $h_j L_i$ do not contain points in balls $B(0,T_j) \subseteq \mathbb{R}^n$ with $T_j \xrightarrow{j\to\infty} \infty$.

In particular, given $T > 0$, let C_i be a cube in $\mathbb{R}^{n_i}$ which contains $\left(\pi^{(i)}_{\text{phys}}\right)^{-1}(B(0,T)) \cap \left(\pi^{(i)}_{\text{int}}\right)^{-1}(W_i)$. The above discussion ensures that there is $h \in H$ such that hL_i is disjoint from C_i for all $i = 1, \dots, r$. In light of Proposition 3.1, this shows that Λ is not DDanzer. $\square$

4. Construction of a dense forest

Another question related to the Danzer problem is the following. A man stands at an arbitrary point x in a forest with trunks of radii $\varepsilon > 0$, how far can he see?

Definition 4.1. – We say that $Y \subseteq \mathbb{R}^d$ is a *dense forest* if there is a function $\varepsilon = \varepsilon(T)$ with $\varepsilon(T) \xrightarrow{T\to\infty} 0$, such that for any $x \in \mathbb{R}^d$ and any $v \in \mathbb{S}^1$ there is $t \in [0,T]$ and $y \in Y$ such that $\|x + tv - y\| < \varepsilon$.

One can easily show the following implications. Every DDanzer set is a dense forest with $\varepsilon(T) = \Omega(T^{-1/(d-1)})$ (where $f(n) = \Omega(g(n))$ means that $\liminf_{n\to\infty} \frac{f(n)}{g(n)} > 0$). This quantity corresponds to the fact that every cylinder of radii $\varepsilon(T)$ that is centered on a line segment of length T contains a point. On the other hand a dense forest with $\varepsilon(T) = O(T^{-(d-1)})$ is a DDanzer set. For this one should consider boxes with edges of lengths $T, \dots, T, \varepsilon(T)$. The proofs of these statements are left to the reader.

A dense forest in $\mathbb{R}^2$ satisfying $\varepsilon(T) = O(T^{-1/4})$ was constructed in a paper of Chris Bishop, see [6, Lemma 2.4], following a suggestion of Yuval Peres. However the set appearing in [6] was not uniformly discrete (it was the union of two uniformly discrete sets). In this section we use homogeneous dynamics and Ratner's theorem on unipotent flows to construct uniformly discrete dense forests in $\mathbb{R}^d$, for arbitrary d.

Suppose G is a Lie group acting smoothly and with discrete stabilizers on a compact manifold X. Then $\mathscr{S} \subseteq X$ is called a *cross-section* if:

- $\mathscr{S}$ is the image under a smooth and injective map of a bounded domain in $\mathbb{R}^k$, where $k = \dim X - \dim G$. By smooth and injective we mean that the map extends smoothly and injectively to an open set containing the closure of its domain.
- There is a neighborhood B of e in G such that the map

$$B \times \mathscr{S} \to X, \quad (b,s) \mapsto b.s \tag{4.1}$$

  is injective and has an open image.
- For any $x \in X$ there is $g \in G$ such that $gx \in \mathscr{S}$.

It follows easily from the implicit function theorem that cross-sections always exist.

If G is a Lie group, we say that its action on X is *completely uniquely ergodic* if there is a measure μ of full support on X with the property that for any one-parameter subgroup $H \subseteq G$, μ is the unique H-invariant Borel probability measure on X. We have the following source of examples for completely uniquely ergodic actions. Here we rely on Ratner's theorem on unipotent flows on homogeneous spaces, see [22] or [20].

PROPOSITION 4.2. – *Suppose G is a simple Lie group and Γ is an arithmetic cocompact lattice, arising from a $\mathbb{Q}$-structure on G for which G has no proper $\mathbb{Q}$-subgroups generated by unipotent elements, and let U be a unipotent subgroup of G. Then the action of U on G/Γ is completely uniquely ergodic.*

Proof. – Any one-parameter subgroup U_0 of U is unipotent, so by Ratner's theorem, any U_0-invariant ergodic measure arises from Haar measure on an intermediate subgroup $U_0 \subseteq L \subseteq G$ which is generated by unipotents and intersects a conjugate of Γ in a lattice in L. This implies that up to conjugation, L is defined over $\mathbb{Q}$, so by hypothesis $L = G$ and the only U_0-invariant measure is the globally supported measure on G/Γ. □

For examples of groups G, Γ satisfying the hypotheses of Proposition 4.2, see [11]. In particular the hypotheses are satisfied for $\mathbb{Q}$-structures on $G = \mathrm{SL}_n(\mathbb{R})$ for n prime ([11, Prop. 4.1]). Since the restriction of a completely uniquely ergodic action of a group H to any proper subgroup remains completely uniquely ergodic, this furnishes examples of completely uniquely ergodic actions of $\mathbb{R}^d$ for any d.

Proof of Theorem 1.3. – By Proposition 4.2 and the preceding remark, the last assertion in the theorem follows from the first one. We will use additive notation for the group operations on U, and we will let $\|\cdot\|$ denote the Euclidean norm on U. We first prove uniform discreteness, i.e.,

$$\inf_{u_1,u_2\in\mathcal{D},u_1\neq u_2} \|u_1 - u_2\| > 0.$$

Let B be as in (4.1), and choose $r > 0$ so that $B(0,r) \subseteq B$. If $u_1.x_0, u_2.x_0 \in \mathcal{S}$ then $u_2 - u_1$ maps a point of $\mathcal{S}$ to $\mathcal{S}$, hence, by the injectivity of the map (4.1) cannot be in B. In particular $\|u_2 - u_1\| \geq r$.

For $v \in \mathbb{S}^{d-1}$ let $C_v(\varepsilon, T)$ be the cylindrical set which is the image of

$$[0,T] \times \{z \in \mathbb{R}^{d-1} : \|z\| \leq \varepsilon\}$$

under an orthogonal linear transformation that maps the first standard basis vector e_1 to v. If Y is not a dense forest then there is a sequence $T_n \to \infty$, $\varepsilon > 0$ and sequences $x_n \in U, v_n \in \mathbb{S}^{d-1}$ such that for all $u \in \mathcal{C}_n$, $x_n + u \notin \mathcal{D}$ where $\mathcal{C}_n \stackrel{\text{def}}{=} C_{v_n}(\varepsilon, T_n)$; that is, for all $u \in \mathcal{C}_n - x_n$, $u.x_0 \notin \mathcal{S}$. Now let $\mathcal{C}'_n \stackrel{\text{def}}{=} C_{v_n}(\varepsilon/2, T_n)$ (so that the $\mathcal{C}'_n$ are parallel to the $\mathcal{C}_n$ but twice as small in the directions transverse to v_n) and define Borel probability measures ν_n on X by

$$\int \varphi \, d\nu_n \stackrel{\text{def}}{=} \frac{1}{\mathrm{vol}(\mathcal{C}'_n)} \int_{\mathcal{C}'_n - x_n} \varphi(u.x_0) du, \quad \varphi \in C_c(X),$$

where du is the Lebesgue measure element on U. We claim that $\nu_n \to \mu$ in the weak-* topology.

It suffices to show that any accumulation point of (ν_n) is μ, and hence to show that any subsequence of (ν_n) contains a subsequence converging to μ. By compactness of the space of probability measures on a compact metric space, after passing to a subsequence we have $\nu_n \to \nu$, and we need to show that $\nu = \mu$. Recall that v_n is the direction of the long axis of $\mathcal{C}'_n$. Passing to another subsequence, the vectors v_n converge to a limit w. By complete unique ergodicity, it suffices to show that ν is invariant under the one-parameter

subgroup $H \stackrel{\text{def}}{=} \operatorname{span}(w)$; but this is a standard exercise, see e.g., [9, Proof of Theorem 2]. This proves the claim.

In order to derive a contradiction, let B_1 be the ball $B(0, \varepsilon/2)$ in U, and let B' denote the image of $B_1 \times \mathscr{S}$ under the map (4.1). With no loss of generality we can assume that B_1 is contained in the neighborhood B appearing in the definition of a section, so that this map is injective on $B_1 \times \mathscr{S}$. Now let φ be a non-negative function supported on B' and with $\int \varphi \, d\mu > 0$. That is, for any $z \in \operatorname{supp} \varphi$ there is $u \in U, \|u\| < \varepsilon/2$ such that $u.z \in \mathscr{S}$. By definition of $\mathscr{D}$ we have that for any $u \in \mathscr{C}_n - x_n$, $u.x_0 \notin \mathscr{S}$. This implies that for all $u \in \mathscr{C}'_n - x_n$, $u.x_0 \notin \operatorname{supp} \varphi$. This violates $\nu_n \to \mu$. □

5. An Equivalent Combinatorial Question

5.1. Preliminaries

We recall some standard notions in combinatorial and computational geometry. For a comprehensive introduction to the notions used in this section we refer to [2, § 14.4], [18, § 10], and [26].

Definition 5.1. – A *range space* is a pair $(X, \mathscr{R})$ where X is a set, and $\mathscr{R} \subseteq \mathscr{P}(X)$ is a collection of subsets of X. The elements of X are called *points*, and the elements of $\mathscr{R}$ are called *ranges*.

In the literature this is also referred to as a 'set system' or a 'hypergraph', where in the latter case X is the set of vertices, and $\mathscr{R}$ is the set of hyperedges.

Many of the commonly studied examples are geometric. For example, X is $\mathbb{R}^d$ or $[0,1]^d$, and $\mathscr{R}$ is the set of all geometric figures of some type, such as half spaces, triangles, aligned boxes, convex sets, etc. For a subset $A \subseteq X$ we denote by $\mathscr{R}|_A = \{S \cap A : S \in \mathscr{R}\}$, the *projection of $\mathscr{R}$ on A*. This notion allows to consider geometric ranges when X is a discrete set, like a thin grid in $[0,1]^d$.

Definition 5.2. – Let $(X, \mathscr{R})$ be a range space with $\#X = n$. For a given $\varepsilon > 0$, a set $N_\varepsilon \subseteq X$ is called an *ε-net* if for every range $S \in \mathscr{R}$ with $\#(S \cap X) \geq \varepsilon n$ we have $S \cap N_\varepsilon \neq \varnothing$. A similar definition is made for an infinite set X, equipped with a probability measure μ on X. In that settings N_ε is an ε-net if $S \cap N_\varepsilon \neq \varnothing$ for every range S with $\mu(S \cap X) \geq \varepsilon$.

Notice that the notion of an ε-net resembles the notion of a Danzer set, when $X = [0,1]^d$ with the standard Lebesgue measure, and $\mathscr{R}$ is the set of convex subsets of X. Below is the computational geometry version of the Danzer problem. It is sometimes referred to as the 'Danzer-Rogers question'.

Question 5.3. – What is the minimal cardinality of an ε-net $N \subseteq [0,1]^d$, where $\mathscr{R}$ is the collection of convex subsets of $X = [0,1]^d$? Do $O(1/\varepsilon)$ points suffice?

In this question one may equivalently take $\mathscr{R}$ to be the collection of boxes in X or the collection of ellipsoids in X. This is due to the following:

Proposition 5.4. – *For any convex set $K \subseteq \mathbb{R}^d$ there exists boxes $R_1 \subseteq K \subseteq R_2$ with* $\operatorname{vol}(R_2)/\operatorname{vol}(R_1) \leq \alpha_d$, *where* $\alpha_d = (3d)^d$.

Proof. – The claim follows from John's Theorem, see [4, Lecture 3]. □

5.2. Proof of Theorem 1.4

We divide the proof of Theorem 1.4 into several parts. We begin with the more difficult implication (ii) $\implies$ (i). Let $\|\cdot\|_2, \|\cdot\|_\infty$ denote the Euclidean and sup-norm respectively, let D be the Euclidean metric, and let $D(x, A) = \inf_{a\in A} D(x, a)$. Let

$$\begin{aligned} Q_t &= \{x \in \mathbb{R}^d : \|x\|_\infty \le t\}, \\ B_t &= \{x \in \mathbb{R}^d : \|x\|_2 \le t\}, \end{aligned} \tag{5.1}$$

and consider the following partition of $\mathbb{R}^d$ into cubical layers that grow exponentially:

$$L_1 = Q_2, \;\; L_i = Q_{2^i} \setminus Q_{2^{i-1}}, \; i \ge 2. \tag{5.2}$$

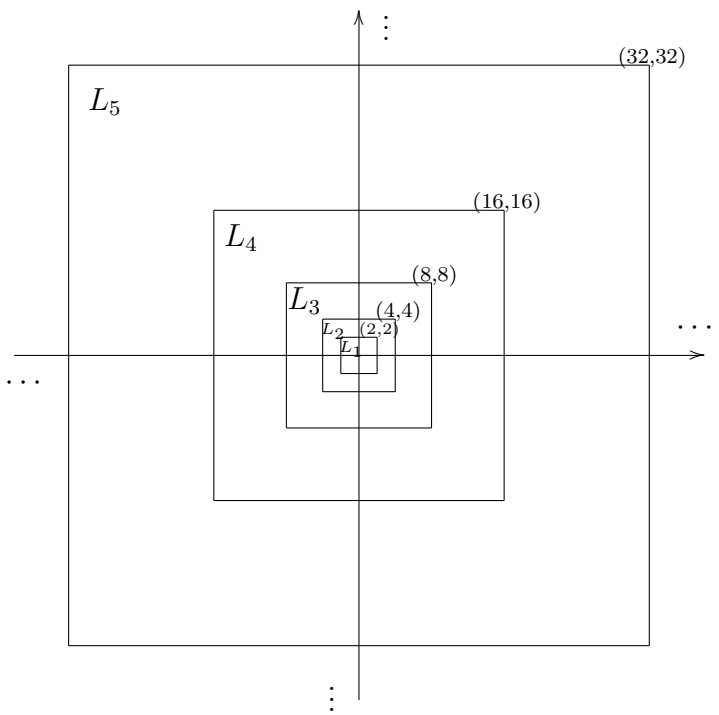

Set

$$C_d = \frac{1}{4d\log_2(10d)}. \tag{5.3}$$

PROPOSITION 5.5. – *Let $g : \mathbb{N} \to \mathbb{N}$ be a doubling function, such that $\frac{g(x)}{x^d}$ is non-decreasing. Suppose that for every $i \in \mathbb{N}$ we have a discrete set $N_i \subseteq L_i$ that intersects every convex set of volume C_d that is contained in L_i. Then*

(i) *$Y \stackrel{\text{def}}{=} \bigcup_{i=0}^\infty N_i$ is a Danzer set in $\mathbb{R}^d$.*
(ii) *If for every i we have $\#N_i \le C_1 g(2^i)$, for a universal constant C_1, then Y has growth rate $O(g(T))$.*

The proof relies on the following two lemmas.

LEMMA 5.6. – *Let $R \subseteq \mathbb{R}^d$ be a box. Suppose that* $\mathrm{vol}(Q_t \cap R) \geq \frac{1}{2}\mathrm{vol}(R)$*, then* $R \subseteq Q_{5td}$.

Proof. – Let x_0 be a vertex of R, and let $r_1, \ldots, r_d$ be the d edges of R with one end-point at x_0. Denote by $|r|$ the length of a segment r, then we have $\mathrm{vol}(R) = \prod_{i=1}^d |r_i|$.

Set $K = Q_t \cap R$ and for every $i \in \{1, \ldots, d\}$ fix

$$k_i = \text{a segment of maximal length in } K, \text{ which is parallel to } r_i.$$

Clearly, for every $i \in \{1, \ldots, d\}$ we have $\mathrm{vol}(K) \leq |k_i| \cdot \prod_{j \neq i} |r_j|$. Hence the assumption $\frac{1}{2}\mathrm{vol}(R) \leq \mathrm{vol}(K)$ implies that

$$\frac{1}{2}|r_i| \leq |k_i| \tag{5.4}$$

for all $i \in \{1, \ldots, d\}$.

Let $\ell = \mathrm{diam}(R)$, and let $k \in K$. Since $D(0, k) \leq t\sqrt{d}$, we have

$$R \subseteq B(k, \ell) \subseteq B_{t\sqrt{d}+\ell} \subseteq Q_{t\sqrt{d}+\ell}.$$

On the other hand

$$\ell = \mathrm{diam}(R) = \sqrt{|r_1|^2 + \ldots + |r_d|^2} \leq \sqrt{d} \max_i \{|r_i|\} \overset{(5.4)}{\leq} 2\sqrt{d} \max_i \{|k_i|\} \leq 4td.$$

So $R \subseteq Q_{5td}$. □

LEMMA 5.7. – *For any box R of volume* 1 *in* $\mathbb{R}^d$ *there is a layer L_i such that $L_i \cap R$ contains a convex set K with* $\mathrm{vol}(K) \geq C_d$*, where C_d is as in* (5.3).

Proof. – Let $m \in \mathbb{N}$ be the minimal integer such that $R \subseteq \bigcup_{i=0}^m L_i = Q_{2^m}$. Let $j \in \mathbb{N}$ be the minimal integer satisfying $5d \leq 2^j$. So we may also write

$$Q_{2^m} = Q_{2^{m-j-1}} \cup L_{m-j} \cup L_{m-j+1} \cup \cdots \cup L_m.$$

Since $\mathrm{vol}(R) = 1$ we either have $\mathrm{vol}(Q_{2^{m-j-1}} \cap R) \geq \frac{1}{2}$ or $\mathrm{vol}((L_{m-j} \cup \cdots \cup L_m) \cap R) \geq \frac{1}{2}$. If $\mathrm{vol}(Q_{2^{m-j-1}} \cap R) \geq \frac{1}{2}$, then by Lemma 5.6 we have

$$R \subseteq Q_{2^{m-j-1} \cdot 5d} \subseteq Q_{2^{m-1}} = \bigcup_{i=0}^{m-1} L_i,$$

contradicting the minimality of m. So $\mathrm{vol}((L_{m-j} \cup \ldots \cup L_m) \cap R) \geq \frac{1}{2}$, and therefore $\mathrm{vol}(L_i \cap R) \geq \frac{1}{2(j+1)} \geq \frac{1}{2\log_2(10d)}$ for some $i \in \{m-j, m-j+1, \ldots, m\}$.

It remains to find a convex set $K \subseteq L_i \cap R$ with $\mathrm{vol}(K) \geq C_d = 1/[4d\log_2(10d)]$. Denote by $F_1, \ldots, F_{2d}$ the external $d-1$-dimensional faces of L_i (namely, the faces of the cube Q_{2^i}). Each F_i defines a convex set

$$K_i = \{x \in L_i : \forall j \neq i, D(x, F_i) \leq D(x, F_j)\}.$$

The sets $K_i \cap R$ are convex and one of them contains at least $(2d)^{-1}$ of the volume of $L_i \cap R$, which gives the desired K. □

Proof of Proposition 5.5. – Assertion (i) follows directly from Lemma 5.7. As for (ii), by adding points to some of the N_i's we may assume that $\#N_i = C_1 g(2^i)$ for every i.

For a measurable set A we denote by $\mathfrak{D}(A) = \frac{\#(Y\cap A)}{\mathrm{vol}(A)}$, the density of the set Y in A, where $Y = \bigcup_i N_i$. Note that for every $i > 0$ the layer L_i is the union of $4^d - 2^d$ cubes of edge length 2^{i-1}, that intersect only at their boundaries. So for every $i > 0$ we have

$$\mathfrak{D}(L_i) = \frac{C_1 g(2^i)}{(4^d - 2^d)(2^{i-1})^d} = \frac{C_1}{2^d - 1} \cdot \frac{g(2^i)}{2^{di}}.$$

Since $\frac{g(x)}{x^d}$ is non-decreasing, $\mathfrak{D}(L_i) \geq \mathfrak{D}(L_{i-1})$, and therefore $\mathfrak{D}(L_i) \geq \mathfrak{D}(Q_{2^{i-1}})$. Also note that for every $i > 0$ we have $\mathrm{vol}(L_i) = (2^d - 1) \cdot \mathrm{vol}(Q_{2^{i-1}})$, then

$$\#N_i = \mathfrak{D}(L_i)\mathrm{vol}(L_i) \geq \mathfrak{D}(Q_{2^{i-1}})(2^d - 1)\mathrm{vol}(Q_{2^{i-1}}) = (2^d - 1)\#(Y \cap Q_{2^{i-1}}).$$

In particular, for every i we have $\#(Y \cap Q_{2^i}) \leq 2\#(N_i) = 2C_1 g(2^i)$. Then for a given n, let $i \in \mathbb{N}$ be such that $n \leq 2^i < 2n$. Then

$$\#(Y \cap Q_n) \leq \#(Y \cap Q_{2^i}) \leq 2C_1 g(2^i) \leq 2C_1 g(2n).$$

Since g is doubling the proof is complete. □

Proof of Theorem 1.4. – For $(ii) \implies (i)$, let $\varepsilon_i = \alpha_d^{-1} C_d \cdot 2^{-di}$, where C_d is as in (5.3), and $\alpha_d = (3d)^d$ is as in Proposition 5.4. Let N_i'' be an ε_i-net for $(X = [-1,1]^d, \{\text{boxes}\})$ with $\#N_i'' \leq Cg\left(\varepsilon_i^{-1/d}\right)$. Rescale by a factor of 2^i in each axis. So X becomes Q_{2^i}, and N_i'' becomes $N_i' \subseteq Q_{2^i}$, a set that intersects every box of volume $\varepsilon_i \cdot 2^{di} = \alpha_d^{-1} C_d$ in Q_{2^i}, with $\#N_i' \leq Cg(\varepsilon_i^{-1/d}) = Cg((\alpha_d^{-1} C_d)^{-1/d} \cdot 2^i)$. Note that since $g(x)$ is doubling we have $\#N_i' = O(g(2^i))$ (with a uniform constant for all i), and it follows from Proposition 5.4 that N_i' intersects every convex set of volume C_d in Q_{2^i}. Let $N_i = N_i' \cap L_i$, where L_i is as in (5.2). Then $\#N_i = O(g(2^i))$ and N_i intersects every convex set of volume C_d that is contained in L_i. By Proposition 5.5 the set $Y = \bigcup_i N_i \subseteq \mathbb{R}^d$ is a Danzer set with growth rate $O(g(T))$.

It remains to prove the easier direction $(i) \implies (ii)$. Suppose that $Y \subseteq \mathbb{R}^d$ intersects every box of volume 1 in $\mathbb{R}^d$. For a given $\varepsilon > 0$ consider the square Q_ε of edge length $\varepsilon^{-1/d}$, centered at the origin. Then $N_\varepsilon \stackrel{\text{def}}{=} Y \cap Q_\varepsilon$ intersects every box of volume 1 that is contained in Q_ε. Contract Q_ε by a factor of $\varepsilon^{1/d}$ in every one of the axes. Then $\varepsilon^{1/d} Q_\varepsilon = [-\frac{1}{2}, \frac{1}{2}]^d$, and $\varepsilon^{1/d} N_\varepsilon$ intersects every box of volume ε in it. In addition, if $Y = O(g(T))$, then there exists a constant C such that for every $\varepsilon > 0$ we have $\#\varepsilon^{1/d} N_\varepsilon = \#N_\varepsilon \leq Cg(\varepsilon^{-1/d})$. □

Proof of Corollary 1.5. – Given $D \subseteq \mathbb{R}^d$ with growth rate $O(g(T))$, that intersects every convex set $K \subseteq \mathbb{R}^d$ of volume 1, setting $D' = \beta_d \cdot D$ for a suitable constant β_d, that depends only on d, we obtain a set with the same growth rate that intersects every convex set of volume C_d. Let $A_i = D' \cap L_i$, then $\#A_i = O(g(2^i))$, and it intersects every convex set $K \subseteq L_i$ of volume C_d . Notice that a convex in L_i with volume C_d must contain a box with some fixed thickness. So taking a thin enough rational grid Γ_i in L_i, and replacing every $x \in A_i$ by the 2^d vertices of the minimal cube with vertices in Γ_i that contains x, we obtain a set $N_i \subseteq L_i \cap \Gamma_i \subseteq \mathbb{Q}^d$ with the same properties as A_i. So by Proposition 5.5, $D_{\mathbb{Q}} \stackrel{\text{def}}{=} \bigcup_i N_i$ is as required. □

6. An improvement of a construction of Bambah and Woods

As we saw in Theorem 1.4, the existence of Danzer sets with various growth rates is equivalent to the existence of ε-nets for the range space of boxes. Finding bounds on the cardinalities of ε-nets in range spaces is an active topic of research in combinatorics and computational geometry. We now derive Theorem 1.6 from results in computational geometry. Many of the results in this direction utilize the low complexity of the range space, which is measured using the following notion.

Definition 6.1. – Let $(X, \mathscr{R})$ be a range space. A finite set $F \subseteq X$ is called *shattered* if

$$\#\{F \cap S : S \in \mathscr{R}\} = 2^{\#F}.$$

The *Vapnic Chervonenkis dimension*, or *VC-dimension*, of a range space $(X, \mathscr{R})$ is

$$\mathrm{VCdim}(X, \mathscr{R}) = \sup\{\#F : F \subseteq X \text{ is shattered}\}.$$

Example 6.2. – To explain this notion we compute the VC-dimension for the following two simple examples, where $X = [0,1]^d$:

- $\mathscr{R}$ is the set of closed half-spaces, where H is a half-space, i.e., $H = \{x \in \mathbb{R}^d : f(x) \leq t\}$, for some linear functional f and $t \in \mathbb{R}$. We show that $\mathrm{VCdim}(X, \mathscr{R}) = d + 1$. First note that if $\Lambda \subseteq X$, $\#\Lambda = d + 1$, and Λ is in general position, then Λ is shattered. On the other hand, by Radon's Theorem, every $\Lambda \subseteq X$ of size $d+2$ can be divided into two sets A, B such that their convex hulls intersect. In particular, there is no half-space H such that $A = \Lambda \cap H$.
- $\mathscr{R}$ is the set of convex sets. Here $\mathrm{VCdim}(X, \mathscr{R}) = \infty$: let C be a $d-1$-dimensional sphere in $[0,1]^d$. Then every finite $C_0 \subseteq C$ is shattered since $C \cap \mathrm{conv}(C_0) = C_0$ and $\mathrm{conv}(C_0) \in \mathscr{R}$.

Low VC-dimension in particular yields a bound on the cardinality of $\mathscr{R}$. Lemma 6.3 below was proved originally by Sauer, and independently by Perles and Shelah; see [2, Lemma 14.4.1].

Lemma 6.3. – *If $(X, \mathscr{R})$ is a range space with VC-dimension d, and $\#X = n$, then $\#\mathscr{R} \leq \sum_{i=0}^{d} \binom{n}{i}$.*

As a corollary we have (see [2] Corollary 14.4.3):

Corollary 6.4. – *Let $(X, \mathscr{R})$ be a range space of VC-dimension d, and let $\mathscr{R}_k$ be $\{s_1 \cap \cdots \cap s_k : s_i \in \mathscr{R}\}$. Then* $\mathrm{VCdim}(X, \mathscr{R}_k) \leq 2dk \log(dk)$.

Since every d-dimensional box is the intersection of $2d$ half-spaces, combining Example 6.2 on half-spaces and Corollary 6.4 we deduce the following.

Corollary 6.5. – *Let Q be a d-dimensional cube, then*

$$\mathrm{VCdim}(Q, \{\textit{boxes}\}) \leq 4d(d+1)\log(2d(d+1)).$$

We proceed to the proof of Theorem 1.6. To simplify notations, we depart slightly from (5.1), and denote by $Q_n \subseteq \mathbb{R}^d$ the cube of edge length n centered at the origin in this section. We begin with the following proposition, which is a special case of a result of Haussler and Welzl [15]. For completeness we include the proof of this proposition, which we learned from Saurabh Ray.

PROPOSITION 6.6. – *For any d there is a constant C such that for any integer $n > 0$ there exists a finite set $N \subseteq Q_n$ with $\#N = Cn^d \log n$, which intersects any box $R \subseteq Q_n$ of volume* 1.

Proof. – Let Γ_n be the set of vertices of a regular decomposition of Q_n into cubes of edge-length $1/n$. Then each edge of Q_n is divided into n^2 points, and therefore $\#\Gamma_n = n^{2d}$. Note that any box $R \subseteq Q_n$ of volume 1 that is contained in Q_n contains $\Omega(n^{2d}/n^d) = \Omega(n^d)$ points of Γ_n (up to an error of $O(n^{d-1})$), and at least $n^d/2$ points (when n is sufficiently large).

Let

$$p = \frac{c\log(n)}{n^d} \in (0,1),$$

where c depend only on d, and will be chosen later. Let N be a random subset of Γ_n that is obtained by choosing points from Γ_n randomly and independently with probability p. Then $\#N$ is a binomial random variable $B(m,p)$, where $m = n^{2d}$, with expectation

$$\mathbb{E}(\#N) = mp = n^{2d} \cdot p = c \cdot n^d \log(n).$$

Since $\#N = B(m,p)$ the values of $\#N$ concentrate near $\mathbb{E}(\#N)$. To be precise, using the Chernoff bound for example (see [1]) one obtains

$$\mathrm{Prob}[|\#N - \mathbb{E}(\#N)| \geq \mathbb{E}(\#N)/2] \leq e^{-\frac{\mathbb{E}(\#N)}{16}}.$$

So in particular with probability greater than $(n-1)/n$ we have

$$\frac{1}{2}cn^d \log(n) \leq \#N \leq \frac{3}{2}cn^d \log(n). \tag{6.1}$$

N misses a given box R if all the points in R are not chosen in the random set N. This occurs with probability at most

$$\begin{aligned}(1-p)^{n^d/2} = \left(1 - \frac{c\log(n)}{n^d}\right)^{\frac{n^d}{c\log(n)} \cdot \frac{c\log(n)}{2}} &\leq \left(1 - \frac{c\log(n)}{n^d}\right)^{\left(\frac{n^d}{c\log(n)}+1\right)\frac{c\log(n)}{4}} \\ &\leq e^{-c\log(n)/4} = \frac{1}{n^{c/4}}.\end{aligned}$$

Let our collection of ranges $\mathscr{R}$ be the collection of boxes in Q_n (where two boxes R_1, R_2 are considered to be equal if their intersections with Γ_n coincide). By Corollary 6.5 we have $\mathrm{VCdim}(Q_n, \mathscr{R}) \leq 4d(d+1)\log(2d(d+1)) \leq 4(d+1)^3 \stackrel{\text{def}}{=} t$. By Lemma 6.3 we have

$$\#\mathscr{R} \leq \sum_{i=0}^{t} \binom{\#\Gamma_n}{i} \leq (t+1)n^{2dt}.$$

Pick $c/4 = 2dt+1 = O(d^4)$. A standard union bound gives that the probability to miss some box R is at most

$$(t+1)n^{2dt} \cdot \frac{1}{n^{c/4}} = O\left(\frac{1}{n}\right). \tag{6.2}$$

By (6.1) and (6.2) we deduce that there exists a set $N \subseteq \Gamma_n$ of size at most $\frac{3}{2}cn^d \log(n)$ that intersects every box of volume 1 in Q_n. □

Proof of Theorem 1.6. – Let $\varepsilon > 0$. Let $n \in \mathbb{N}$ be the minimal positive integer that satisfies $1/n^d \leq \varepsilon$. By Proposition 6.6 for every $n \in \mathbb{N}$ we have a set $N_n \subseteq Q_n$, with $\#N_n \leq Cn^d \log(n)$ that intersects every box of volume 1 in Q_n. Rescaling by a factor of $1/n$ in each axis, we obtain a set $Y_n \subseteq [-1/2, 1/2]^d$ of size at most $Cn^d \log(n)$ that intersects every box of volume $1/n^d$ in $[-1/2, 1/2]^d$. In particular, for every ε we have constructed an ε-net of cardinality $Cn^d \log(n)$ for the range space $([0,1]^d, \{\text{boxes}\})$. Notice that $n - 1 < \varepsilon^{-1/d} \leq n$, so we showed (ii) of Theorem 1.4, with $g(x) = x^d \log(x)$, and therefore we have a Danzer set of growth rate $O(T^d \log(T))$. □

7. Some open questions

We conclude with a list of open questions which would constitute further progress toward Danzer's question.

7.1. Fractal substitution systems and model sets

In § 2 we showed that Delone sets obtained from *polygonal* substitution tilings are not Danzer sets. There is also a theory of substitution tilings in which the basic tiles are fractal sets (see [25] and the references therein), and our methods do not apply to these tilings. It would be interesting to extend Theorem 1.1 to substitution tilings which are not polygonal. Also it would be interesting to extend Theorem 1.1 to finite unions of sets obtained from substitution tilings.

Similarly, in our definition of cut-and-project sets, the internal space was taken to be a real vector space. More general constructions, often referred to as *model sets*, in which the internal space is an arbitrary locally compact abelian group have also been considered, see, e.g., [19, 3]. It is likely that Theorem 1.2 can be extended to model sets with a similar proof.

7.2. Quantifying the density of forests

We do not know whether the dense forest constructed in § 4 is a Danzer set. One can also ask how close it is to being one, in the following sense. One can quantify the 'density' of a dense forest by obtaining upper bounds on the function $\varepsilon(T)$; as we remarked in § 4 if $Y \subseteq \mathbb{R}^d$ is a dense forest with $\varepsilon(T) = O(T^{-(d-1)})$ then it is a DDanzer set. As also mentioned in § 4, the example of Peres given in [6] is a dense forest in $\mathbb{R}^2$ with $\varepsilon(T) = O(T^{-1/4})$. It would be interesting to construct dense forests in the plane with $\varepsilon(T) = \Omega(T^s)$ for $s < -1/4$.

In our example of a dense forest, an upper bound on the function $\varepsilon(T)$ would follow from a bound on the rate of convergence of ergodic averages in Ratner's equidistribution theorem, for one parameter unipotent flows on homogeneous spaces such as those in Proposition 4.2. Note that in these examples, when $d > 1$, one-parameter groups are not horospherical and hence such bounds are very difficult to obtain. In a work in progress [16], Lindenstrauss, Margulis and Mohammadi prove such bounds but they are much weaker than the bounds required to prove the Danzer property.

7.3. Relation to dynamics on pattern spaces

The collection $\mathscr{C}$ of closed subsets of $\mathbb{R}^d$ is compact with respect to a natural topology sometimes referred to as the *Chabauty topology*. Roughly speaking, two A and B are close to each other in $\mathscr{C}$ if their intersections with large balls are close in the Hausdorff metric. The group $\mathrm{ASL}_d(\mathbb{R})$ of volume preserving affine maps acts on $\mathscr{C}$ via its action on $\mathbb{R}^d$, and recalling Proposition 3.1, we can interpret the Danzer property as a statement about this action. Namely $Y \in \mathscr{C}$ is not DDanzer (in the sense of § 3) if its orbit-closure contains the empty set. This leads to the following question:

QUESTION 7.1. – Is it true that the only minimal sets for the action of $\mathrm{ASL}_d(\mathbb{R})$ on $\mathscr{C}$ are the fixed points $Y = \varnothing, Y = \mathbb{R}^d$?

In [12], Gowers proposed a weakening of the Danzer question. He asked whether there are Danzer sets Y which have the additional property that

$$\sup\{\#(Y \cap C) : C \text{ convex, } \mathrm{vol}(C) = 1\} < \infty.$$

It is not hard to show that an affirmative answer to Question 7.1 would imply a negative answer to Gowers' question.

BIBLIOGRAPHY

[1] Chernoff bound, Wikipedia page, `http://en.wikipedia.org/wiki/Chernoff`.

[2] N. ALON, J. H. SPENCER, *The probabilistic method*, third ed., Wiley-Interscience Series in Discrete Mathematics and Optimization, John Wiley & Sons, Inc., Hoboken, NJ, 2008.

[3] M. BAAKE, R. V. MOODY (eds.), *Directions in mathematical quasicrystals*, CRM Monograph Series **13**, Amer. Math. Soc., Providence, RI, 2000.

[4] K. BALL, An elementary introduction to modern convex geometry, in *Flavors of geometry*, Math. Sci. Res. Inst. Publ. **31**, Cambridge Univ. Press, Cambridge, 1997, 1–58.

[5] R. P. BAMBAH, A. C. WOODS, On a problem of Danzer, *Pacific J. Math.* **37** (1971), 295–301.

[6] C. J. BISHOP, A set containing rectifiable arcs QC-locally but not QC-globally, *Pure Appl. Math. Q.* **7** (2011), 121–138.

[7] J. W. S. CASSELS, *An introduction to the geometry of numbers*, Grundl. math. Wiss. **99**, Springer, 1971.

[8] H. T. CROFT, K. J. FALCONER, R. K. GUY, *Unsolved problems in geometry*, Problem Books in Mathematics, Springer, 1991.

[9] S. G. DANI, G. A. MARGULIS, Limit distributions of orbits of unipotent flows and values of quadratic forms, in *I. M. Gel′fand Seminar*, Adv. Soviet Math. **16**, Amer. Math. Soc., Providence, RI, 1993, 91–137.

[10] W. FENCHEL (ed.), *Proceedings of the Colloquium on convexity 1965*, Københavns Univ. Mat. Inst., Nato Advanced Study Institutes Programme, 1965.

[11] S. GARIBALDI, P. GILLE, Algebraic groups with few subgroups, *J. Lond. Math. Soc.* **80** (2009), 405–430.

[12] T. Gowers, Rough structures and classification, in *Visions in Mathematics* (N. Alon et al., eds.), **2000**, Birkhäuser, 79–117.

[13] P. M. Gruber, C. G. Lekkerkerker, *Geometry of numbers*, second ed., North-Holland Mathematical Library **37**, North-Holland Publishing Co., Amsterdam, 1987.

[14] B. Grünbaum, G. C. Shephard, *Tilings and patterns*, W. H. Freeman and Company, 1987.

[15] D. Haussler, E. Welzl, ϵ-nets and simplex range queries, *Discrete Comput. Geom.* **2** (1987), 127–151.

[16] E. Lindenstrauss, G. A. Margulis, A. Mohammadi, in preparation.

[17] J. Marklof, A. Strömbergsson, Free path lengths in quasicrystals, *Comm. Math. Phys.* **330** (2014), 723–755.

[18] J. Matoušek, *Lectures on discrete geometry*, Graduate Texts in Math. **212**, Springer, 2002.

[19] Y. Meyer, Quasicrystals, Diophantine approximation and algebraic numbers, in *Beyond quasicrystals (Les Houches, 1994)*, Springer, 1995, 3–16.

[20] D. W. Morris, *Ratner's theorems on unipotent flows*, Chicago Lectures in Mathematics, University of Chicago Press, 2005.

[21] C. Radin, *Miles of tiles*, Student Mathematical Library **1**, Amer. Math. Soc., Providence, RI, 1999.

[22] M. Ratner, Raghunathan's topological conjecture and distributions of unipotent flows, *Duke Math. J.* **63** (1991), 235–280.

[23] E. A. Robinson, Jr, Symbolic dynamics and tilings of $\mathbb{R}^d$, *Proc. Sympos. Appl. Math.* **60** (2004), 81–119.

[24] M. Senechal, *Quasicrystals and geometry*, Cambridge Univ. Press, Cambridge, 1995.

[25] B. Solomyak, Dynamics of self-similar tilings, *Ergodic Theory Dynam. Systems* **17** (1997), 695–738.

[26] V. N. Vapnik, A. Y. Chervovenkis, On the uniform convergence of relative frequencies of events to their probabilities, *Theory Probab. Appl.* **16** (1971), 264–280.

(Manuscrit reçu le 8 juillet 2014 ;
accepté, après révision, le 16 octobre 2015.)

Yaar Solomon
Department of Mathematics
Stony Brook University
Stony Brook, N.Y. 11790, USA
E-mail: `yaar.solomon@stonybrook.edu`

Barak Weiss
School of Mathematical Sciences
Tel Aviv University
Ramat Aviv
69978 Tel Aviv, Israel
E-mail: `barakw@post.tau.ac.il`